QUASAR KIT No. 1045

SOUND EFFECTS GENERATOR

General Description

A very easy to build sound effects generator with very interesting characteristics. It is capable of producing many different sounds from those of sirens to the chirping of birds etc. It has a small amplifier incorporated and the kit comes complete with the speaker.

Technical Specifications - Characteristics

Working voltage: 9V DC
Current: 20 mA
Output power: 50 mW

How it Works

The circuit is quite simple. It has an oscillator built around the first two inverters of the six that are found in the interior of the IC 4049. This oscillator's frequency can be varied by means of the trimmer P1. The output of the oscillator is fed to the other four inverters which are connected in parallel and amplify the signal to drive the speaker, and at the same time is also taken to the input of the other IC which is a 4040, 12 bit binary counter. The outputs of the counter are connected through resistors of different values to the base of the transistor TR1 which has its emitter and collector connected at the «-« and «+» points of a rectifier bridge respectively. When the oscillator is working the transistor is supplied through the bridge and according to the state of the outputs of the counter will be biased differently at each given moment. The output of the counter changes as it continuously receives pulses from the oscillator and this changes the bias of the transistor every time there is a change in the output of the counter. What happens really is that as the counter's outputs are taken high or low and there are different resistors connected in series with each one, the potential with respect to ground of the common point between these resistors and R9 is continuously changing. This also affects the frequency of the oscillator and the output tone becomes a continuously changing one. The frequency adjustment by means of P2 creates a basic «frame» within which everything is repeated in a given period of time, giving the output some sort of a pattern. This accounts for the resemblance of the output to various known sounds.

Construction

First of all let us consider a few basics in building electronic circuits on a printed circuit board. The board is made of a thin insulating material clad with a thin layer of conductive copper that is shaped in such a way as to form the necessary conductors between the various components of the circuit. The use of a properly designed printed circuit board is very desirable as it speeds construction up considerably and reduces the possibility of

making errors. Quasar Kit boards also come pre-drilled and with the outline of the components and their identification printed on the component side to make construction easier. To protect the board during storage from oxidation and assure it gets to you in perfect condition the copper is tinned during manufacturing and covered with a special varnish that protects it from getting oxidised and also makes soldering easier. Soldering the components to the board is the only way to build your circuit and from the way you do it depends greatly your success or failure. This work is not very difficult and if you stick to a few rules you should have no problems. The soldering iron that you use must be light and its power should not exceed the 25 Watts. The tip should be fine and must be kept clean at all times. For this purpose come very handy specially made sponges that are kept wet and from time to time you can wipe the hot tip on them to remove all the residues that tend to accumulate on it.
DO NOT file or sandpaper a dirty or worn out tip. If the tip cannot be cleaned, replace it. There are many different types of solder in the market and you should choose a good quality one that contains the necessary flux in its core, to assure a perfect joint every time. DO NOT use soldering flux apart from that which is already included in your solder. Too much flux can cause many problems and is one of the main causes of circuit malfunction. If nevertheless you have to use extra flux, as it is the case when you have to tin copper wires, clean it very thoroughly after you finish your work. In order to solder a component correctly you should do the following:
- Clean the component leads with a small piece of emery paper.
- Bend them at the correct distance from the component's body and insert the component in its place on the board.
- You may find sometimes a component with heavier gauge leads than usual, that are too thick to enter in the holes of the p.c. board. In this case use a mini drill to enlarge the holes slightly.
- Do not make the holes too large as this is going to make soldering difficult afterwards.
- Take the hot iron and place its tip on the component lead while holding the end of the solder wire at the point where the lead emerges from the board. The iron tip must touch the lead slightly above the p.c. board. - When the solder starts to melt and flow wait till it covers evenly the area around the hole and the flux boils and gets out from underneath the solder. The whole operation should not take more than 5 seconds. Remove the iron and allow the solder to cool naturally without blowing on it or moving the component. If everything was done properly the surface of the joint must have a bright metallic finish and its edges should be smoothly ended on the component lead and the board track. If the solder looks dull, cracked, or has the shape of a blob then you have made a dry joint and you should remove the solder (with a pump, or a solder wick) and redo it. - Take care not to overheat the tracks as it is very easy to lift them from the board and break them.
- When you are soldering a sensitive component it is good practice to hold the lead from the component side of the board with a pair of long-nose pliers to divert any heat that could possibly damage the component.
- Make sure that you do not use more solder than it is necessary as you are running the risk of short-circuiting adjacent tracks on the board, especially if they are very close together.
- When you finish your work cut off the excess of the component leads and clean the board thoroughly with a suitable solvent to remove all flux residues that may still remain on it.

The building of the project presents no difficulty at all if you follow the diagrams carefully. First of all solder the pins and the two IC sockets, continue with the resistors, the capacitors, the trimmer, the diodes and the transistor and finally when everything has been soldered in its place and you are sure that there are no mistakes insert the IC's in their

sockets. The IC's are of the CMOS type and should be handled with care as they can be damaged very easily by static electricity. Avoid to touch their pins and keep the board and your body grounded while you insert them in their sockets. Make sure that they are not swapped between them and that you insert them the right way round. Then connect the speaker supplied with the kit at points 2 and 3 and a miniature 9 V battery by means of the battery clip provided at points 1 (+) and 4 (-) of the circuit. You should be able to hear sounds from the speaker the frequency and the pattern of which will change as you turn the trimmer P1.

Adjustments

This kit does not need any adjustments, if you follow the building instructions.

Warning

Quasar kits are sold as stand alone training kits.
If they are used as part of a larger assembly and any damage is caused, our company bears no responsibility.

While using electrical parts, handle power supply and equipment with great care, following safety standards as described by international specs and regulations.

If it does not work

Check your work for possible dry joints, bridges across adjacent tracks or soldering flux residues that usually cause problems.
Check again all the external connections to and from the circuit to see if there is a mistake there.
- See that there are no components missing or inserted in the wrong places.
- Make sure that all the polarised components have been soldered the right way round. - Make sure the supply has the correct voltage and is connected the right way round to your circuit.
- Check your project for faulty or damaged components.
If your project still fails to work, please contact us for information about our Get-You-Going service.

Schematic Diagram

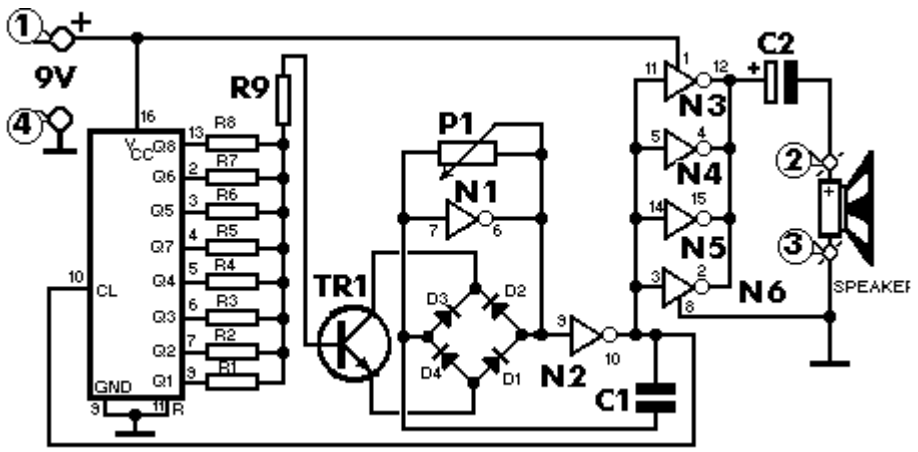

Parts List

All components including printed circuit board, assembly instructions including schematics and detailed parts list are supplied when you purchase the kit.

Ordering

For pricing info and online ordering please visit:

http://www.quasarelectronics.com/1045.htm

For further info please contact us by e-mail:

mailto: sales@QuasarElectronics.com